KAESER COMPRESSORS

www.kaeser.com

Filters & Centrifugal Separators

Air flow rates 0.58 to 248 m³/min

KAESER COMPRESSORS

Why use compressed air filters?

On average, a compressor sucks in up to 190 million particles of dirt, hydrocarbons, viruses and bacteria with every cubic meter of atmospheric air. The compressor itself can only remove the larger particles and the majority of the contaminants remain in the compressed air. This means that for most applications careful treatment of the air is necessary: Clean, quality compressed air maximises air-tool service life, ensures that pneumatic machinery and control systems operate at the peak of their performance and keeps pipes & valves free from contamination. It therefore not only reduces service, maintenance and repair costs, but can also reduce initial investment costs.

KAESER filters ensure a dependable and cost-effective source of quality compressed air

Compressed air filters from KAESER KOMPRESSOREN are ideally suited for use with our compressors and compressed air drying systems. This ensures dependable compressed air treatment and exceptional efficiency.

1. Compressed air inlet
2. Compressed air outlet
3. Filter housing
4. Filter element
5. Electronically controlled ECO DRAIN condensate drain

KAESER Compressed air filters

Dependable and efficient

Sterile filters

Centrifugal separator

High-pressure filters

Air filters

Tailored compressed air treatment

All Kaeser filters and compressed air treatment components are specifically designed for use in combination with one another.

Compressed air of every quality class is available ranging from general works air right up to foodstuff and pharmaceutical grade air. KAESER compressed air filters are also available for high-pressure applications up to 62 $bar_{(g)}$.

Air filters

Kaeser's extensive range of filters ensures that there's a model available to suit every compressed air need. Water, oil and dust are removed efficiently and with minimal differential pressure.

Centrifugal separator

For removal of liquid condensate. Typically used downstream from the compressor. Results in near 100 % relative humidity, which is ideal for further drying systems.

Filters up to 48 or 62 bar

We also have an extensive range of filters available for high-pressure applications, such as PET container production. Suited for use with pressures of up to 48 or 62 bar, these high-quality filters remove oil, water and dust.

Sterile filters

These exceptionally reliable sterile filters are perfect for applications that require sterile, bacteria-free compressed air, such as those in the food and pharmaceutical industries.

Certified: Clean compressed air

Kaeser compressed air systems provide the required grade of compressed air quality to suit every compressed air application. This includes technically oil-free compressed air, which is many times cleaner than normal ambient air.
All systems and equipment are tested and certified by the German Technical Inspection Institute (TÜV).

Compressed air filters

Perfectly matched to compressor and compressed air treatment equipment, Kaeser's extensive range of filters ensures that all relevant compressed air quality classes are maintained reliably and efficiently over the long-term.

FFG micro-filter combination comprises: FF micro-filter and FG activated carbon filter

Optionally available without electronic condensate drain ("Standard version")

Filter change maintenance indicator

The filter monitor ... (optional)

... indicates when filter change is required.

- **Microprocessor-controlled LCD display**
- **Comprehensive filter monitoring based on:**
  - operating time
  - differential pressure
  - operation efficiency: comparison of increasing energy requirement caused by filter clogging to a maximum value that is dependent on the operating conditions and which is calculated by the monitor
- **Significant energy savings**
- **'Filter change' warning** with red LED and alarm contact
- **Continuous measurement of pressure differential** to an accuracy of 0.025 bar via precision pressure transducer
- **Direct data input,** no separate programming device required

The high performance filter element ...

... ensures **reliable filtration** with minimal pressure losses:

- **Coalescence filter** with new, matrix filter-fibre structure
- **High efficiency even at low air volumes** of only five percent of nominal flow
- **Reliable element-to-housing** seal
- Stainless steel orifice tubes, **oil & acid resistant** coated sleeves and end caps

The filter housing ...

... that lasts:

- **Long service life** thanks to the epoxy resin coating inside and out (proven in over 1000 hours of salt contamination tests)
- **Easy filter element removal** with Kaeser's O-ring seal system
- **Minimal pressure drop** due to optimised air flow
- The conical bowl **and turbulence-free lower filter zone** prevent condensate from being carried along with the air flow
- **Audible warning** should leakage occur.

The shut-off valve ...

... allows maintenance of the condensate drain without interrupting air supply.

Condensate drainage with the ECO Drain (optional) ...

... is electronically level-controlled and fully automatic, which means:

- **No air losses**
- **Exceptional reliability**

D-Pack Version:
With electronic ECO DRAIN; includes volts-free alarm contact

D-Pack *basic* version:
With electronic ECO DRAIN 30 condensate drain; for filter sizes F6 to F221

KAESER COMPRESSORS

Tailored filtration for every compressed air need

FB pre-filter 3 µm

Use: For removal of solid particles and larger volumes of condensate.

To be used as a pre-filter for solid particles and for removal of larger volumes of condensate.

Size of particles removed: > 3 µm
Max. fluid load at inlet: 25 g/m³

FC pre-filter 1 µm

Use: For removal of solid particles and small volumes of condensate.

To be used as a pre-filter for solid particles and for removal of small volumes of condensate.

A centrifugal separator or an air receiver should be installed upstream to provide initial removal of condensate.

Size of particles removed: > 1 µm
Max. fluid load at inlet: 2 g/m³

FD dust filter

Use: For removal of solid particles

To be used only as a dust filter for solid particles, often used downstream from desiccant dryers and activated carbon adsorbers. Through-flow from outside to inside – ensures exceptionally high dust load capacity and maximum reliability.

Size of particles removed: > 1 µm
Max. fluid load at inlet: Compressed air must be dry

FE fine micro-filter

Use: For removal of fine solid particles, condensate droplets and oil aerosols.

For use as a fine filter for enhanced compressed air quality. The filter removes solid particles, condensate droplets and oil aerosols.

Size of particles removed: > 0.1 µm
Max. fluid load at inlet: 1 g/m³

FF finest micro-filter

Use: For removal of solid particles, the smallest of condensate droplets and oil aerosols.

The high capacity filter ensures exceptional compressed air quality in accordance with the most stringent requirements, e.g. for the pharmaceutical, electronics and foodstuff industries. Preferably use only with condensate-free compressed air. Ensure that a FE filter or a refrigeration dryer is installed upstream from this filter.

Size of particles removed: > 0.1 µm
Max. fluid load at inlet: 0.1 g/m³

FG activated carbon filter

Use: For removal of oil and adsorbable hydrocarbons, particularly suited to odour elimination.

The activated carbon filter ensures exceptional compressed air quality in accordance with the most stringent requirements, e.g. for the pharmaceutical, electronics and foodstuff industries. Compressed air must be dried and filtered beforehand. Ensure that a FE/FF filter and a dryer are installed upstream from this filter.
Designed for approx. 1000 operating hours under reference conditions. Use an activated carbon adsorber (ACT series) if significantly longer service life is required.

Size of particles removed: –
Max. fluid load at inlet: Compressed air must be dry

Max. working pressure 16 bar
Max. working temperature +66 °C

Centrifugal separator

Function:

The centrifugal separator removes large volumes of condensate from the compressed air. Optimised design enhances the centrifugal effect and ensures a near constant degree of condensate separation over a wide flow volume range. Furthermore, particles up to 5 µm are also "washed out".

Application:

A centrifugal separator is recommended for systems where the refrigeration dryer is installed “directly” downstream from the rotary screw compressor.

The centrifugal separator is installed between the compressor and the refrigeration dryer and removes the ‘liquid condensate’ from the compressed air. This provides the refrigeration dryer with additional reserve drying capacity. This is particularly important at high ambient temperatures in order to ensure that the required dew point is consistently maintained.

KAESER centrifugal separators are maintenance-free.

Tip:

Each centrifugal separator should be fitted with an electronic ECO Drain condensate drain (available as a complete set with all necessary components).

Consistent degree of separation

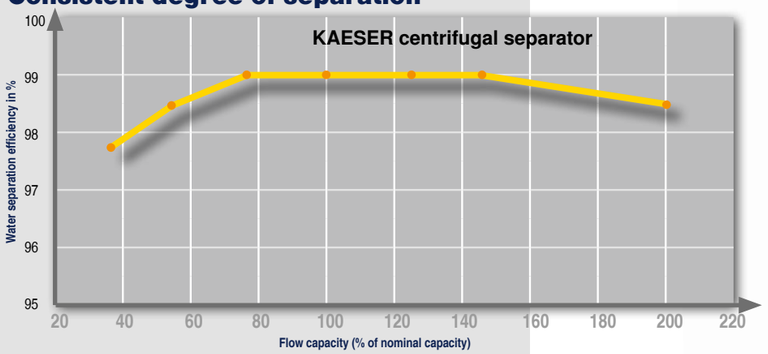

KAESER COMPRESSORS

Sterile filter

For sterile air:

The FST sterile filter is made of high quality 1.4301 (304) stainless steel that prevents bacterial growth and corrosion. The upper and lower housings are fitted with BSP screw connections and plugs. All filter elements are subjected to multiple testing at the factory to ensure unrivalled reliability.

All components comply with FDA regulations concerning contact with foodstuffs as per CFR (Code of Federal Regulations) Title 21.

The pre-filter and micro-fibre web consist of borosilicate, which is free of adhesive agent. Retention of bacteria and particles occurs throughout the whole filter volume. On average, over 100 sterilisation cycles are possible with saturated steam (at 141 °C).

Max. operating temperature range -20 to +200 °C.

Typical uses for FST sterile filters:

- Food and chemical industries
- Packaging industry
- Pharmaceuticals, medical technology, hospitals

Tip:

The use of a sterile filter requires appropriate sterilisation measures to be taken (e.g. in-line sterilisation or autoclave). These measures should be carried out at regular intervals.

KAESER sterile filters for bacteria-free compressed air

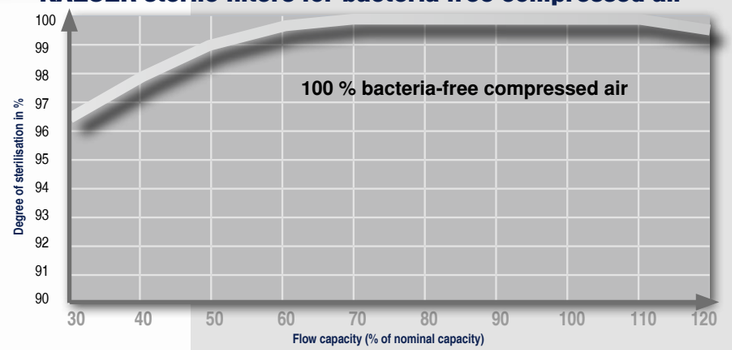

Filters for 48 or 62 bar

KAESER high-pressure 48/62 bar filters are available for installation at the booster outlet for special high-pressure applications, e.g. PET container production. These also ensure certified compressed air quality.

Filter housing

Durable, pressure-resistant steel housing

Filter element

Five different filter elements, ranging from pre-filters to activated carbon filters, are available for pressures up to 62 bar

Special electronic condensate drain (optional)

KAESER high-pressure filters can also be equipped with the electronically controlled ECO Drain condensate drain (PN 63).

KAESER COMPRESSORS

48/62 bar filters for every compressed air need

Use: For removal of solid particles and larger volumes of condensate.

To be used as a pre-filter for solid particles and for removal of larger volumes of condensate.

Size of particles removed: > 3 µm
Max. fluid load at inlet: 25 g/m³

Use: For removal of solid particles and smaller volumes of condensate.

To be used as a pre-filter for solid particles and for removal of small volumes of condensate.

A centrifugal separator or an air receiver should be installed upstream to provide initial removal of condensate.

Size of particles removed: > 1 µm
Max. fluid load at inlet: 2 g/m³

Use: For removal of fine solid particles, condensate droplets and oil aerosols.
For use as a fine filter for enhanced compressed air quality.
Removes solid particles, condensate droplets and oil aerosols.

Size of particles removed: > 0.1 µm
Max. fluid load at inlet: 1 g/m³

Use: For removal of fine solid articles, condensate droplets and oil aerosols.

The high capacity filter ensures exceptional compressed air quality in accordance with the most stringent requirements, e.g. for the pharmaceutical, electronics and foodstuff industries. Preferably use only with condensate-free compressed air. Ensure that an FE filter or a refrigeration dryer is installed upstream from this filter.

Size of particles removed: > 0.1 µm
Max. fluid load at inlet: 0.1 g/m³

Use: For removal of oil and adsorbable hydrocarbons, particularly suited to odour elimination.

The activated carbon filter ensures exceptional compressed air quality in accordance with the most stringent requirements, e.g. for the pharmaceutical, electronics and food / beverage industries. Use only with compressed air that has already been dried and filtered. Ensure that a FE/FF filter and a dryer are installed upstream from this filter.

Designed for approx. 1000 operating hours under reference conditions. Use an activated carbon adsorber (ACT series) if significantly longer service life is required.

Size of particles removed: > 0.1 µm
Max. fluid load at inlet: Compressed air must be dry

Max. working pressure 48 or 62 bar

Technical Specifications

Filter series: FB, FC, FD, FE, FF, FG, FFG – **Filter sizes:** 6, 10, 18, 28, 48, 71, 107, 138, 177, 221, 185, 283, 354, 526, 708, 885, 1420, 1950, 2480
Versions: "Normal" with float-controlled drain – **"D"** with electronic level-sensing ECO DRAIN condensate drain
Aluminium casing for filter sizes from 6 to 221, **Steel casing** for filter sizes from 185 to 2480

Designation:
Filter housing

Filter series — Version
FE 221 D
Size

Compressed air filter for max. 16 bar, max. operating temp. +66 °C

Flow rate *) m³/min FB – FFG	Filter size	Air connection FB – FFG	Weight kg (Normal version) FB – FC	FD	FE – FF	FG	FFG	Dimensions A, B, C in mm (Normal version) FB – FC	FD	FE – FF	FG	FFG	Removal height (for maintenance) mm
0.58	**6**	R 3/8	3.6	3.5	3.6	3.4	7.1	105, 233, 163	105, 306, 224	105, 306, 224	105, 182, 163	210, 306, 224	76
1.0	**10**	R 1/2	3.7	3.6	3.7	3.5	7.3	105, 306, 224	105, 306, 224	105, 306, 224	105, 255, 244	210, 306, 224	76
1.75	**18**	R 1/2	3.9	3.8	3.9	3.7	7.7	105, 367, 285	105, 367, 285	105, 367, 285	105, 316, 285	210, 367, 285	76
2.83	**28**	R 3/4	4.4	4.3	4.4	4.2	8.7	133, 389, 298	133, 389, 298	133, 389, 298	133, 338, 298	266, 389, 298	89
4.83	**48**	R 1	4.8	4.7	4.8	4.6	9.5	133, 497, 406	133, 497, 406	133, 497, 406	133, 446, 406	266, 497, 406	89
7.1	**71**	R 1 1/2	4.6	4.5	4.6	4.4	9.1	164, 579, 482	164, 579, 482	164, 579, 482	164, 528, 482	328, 579, 482	102
10.7	**107**	R 1 1/2	5.1	5.0	5.1	4.9	10.1	162, 693, 596	164, 693, 596	164, 693, 596	164, 642, 596	328, 693, 596	102
13.8	**138**	R 2	12.7	12.6	12.7	12.5	25.3	194, 789, 681	194, 789, 681	194, 789, 681	194, 739, 681	388, 789, 681	102
17.7	**177**	R 2 1/2	15	14.9	15	14.8	29.9	194, 935, 827	194, 935, 827	194, 935, 827	194, 885, 827	388, 935, 827	102
22.1	**221**	R 2 1/2	17.2	17.1	17.2	17	34.3	194, 1091, 983	194, 1091, 983	194, 1091, 983	194, 1040, 983	388, 1091, 983	102
18.5	**185**	DN 80	29.9	28.4	29.3	28.6	58.6	350, 1130, 950	350, 1025, 845	350, 1130, 950	350, 1025, 845	700, 1130, 950	610
28.3	**283**	DN 80	41.1	37.0	40.1	37.2	78	400, 1205, 1013	400, 1045, 853	400, 1205, 1013	400, 1045, 853	800, 1205, 1013	610
35.4	**354**	DN 80	41.8	37.4	40.5	38.1	79.3	400, 1240, 1013	400, 1045, 853	400, 1205, 1013	400, 1045, 853	800, 1205, 1013	610
52.6	**526**	DN 100	53.4	48.4	51.5	49.7	101.9	440, 1240, 1023	440, 1085, 868	440, 1240, 1023	440, 1085, 868	880, 1240, 1023	610
70.8	**708**	DN 100	70	64.4	66.7	66.2	133.6	535, 1255, 1022	535, 1105, 872	535, 1255, 1022	535, 1105, 872	1070, 1255, 1022	610
88.5	**885**	DN 100	71.7	65.4	67.7	67.8	136.2	535, 1255, 1022	535, 1105, 872	535, 1255, 1022	535, 1105, 872	1070, 1255, 1022	610
142	**1420**	DN 150	126.5	118.4	121.5	122.4	244.6	600, 1355, 1043	600, 1215, 903	600, 1355, 1043	600, 1215, 903	1200, 1355, 1043	610
195	**1950**	DN 150	182.8	171.4	175.9	177.1	353.7	720, 1520, 1183	720, 1245, 908	720, 1520, 1183	720, 1245, 908	1440, 1520, 1183	610
248	**2480**	DN 150	237.7	224.4	228.9	231.7	461.3	750, 1540, 1192	750, 1265, 917	750, 1540, 1192	750, 1265, 917	1500, 1540, 1192	610

Correction factors

Working pressure bar	*2*	*3*	*4*	*5*	*6*	*7*	*8*	*9*	*10*	*11*	*12*	*13*	*14*	*15*	*16*
Conversion factor for flow rate	0.38	0.52	0.63	0.75	0.88	1	1.13	1.26	1.38	1.52	1.65	1.76	1.87	2	2.14

Replacement filter elements

Series — Size
E-E-221
Replacement filter element

Replacement filter elements

Filter size	No.	Replacement filter elements FB	FC	FD	FE	FF	FG
6	1	E-B-6	E-C-6	E-D-6	E-E-6	E-F-6	E-G-6
10	1	E-B-10	E-C-10	E-D-10	E-E-10	E-F-10	E-G-10
18	1	E-B-18	E-C-18	E-D-18	E-E-18	E-F-18	E-G-18
28	1	E-B-28	E-C-28	E-D-28	E-E-28	E-F-28	E-G-28
48	1	E-B-48	E-C-48	E-D-48	E-E-48	E-F-48	E-G-48
71	1	E-B-48	E-C-71	E-D-71	E-E-71	E-F-71	E-G-71
107	1	E-B-107	E-C-107	E-D-107	E-E-107	E-F-107	E-G-107
138	1	E-B-138	E-C-138	E-D-138	E-E-138	E-F-138	E-G-138
177	1	E-B-177	E-C-177	E-D-177	E-E-177	E-F-177	E-G-177
221	1	E-B-138	E-C-221	E-D-221	E-E-221	E-F-221	E-G-221
185	1	E-B-185	E-C-185	E-D-185	E-E-185	E-F-185	E-G-185
283	2	E-B-283	E-C-283	E-D-283	E-E-283	E-F-283	E-G-283
354	2	E-B-185	E-C-185	E-D-185	E-E-185	E-F-185	E-G-185
526	3	E-B-185	E-C-185	E-D-185	E-E-185	E-F-185	E-G-185
708	4	E-B-185	E-C-185	E-D-185	E-E-185	E-F-185	E-G-185
885	5	E-B-185	E-C-185	E-D-185	E-E-185	E-F-185	E-G-185
1420	8	E-B-185	E-C-185	E-D-185	E-E-185	E-F-185	E-G-185
1950	11	E-B-185	E-C-185	E-D-185	E-E-185	E-F-185	E-G-185
2480	14	E-B-185	E-C-185	E-D-185	E-E-185	E-F-185	E-G-185

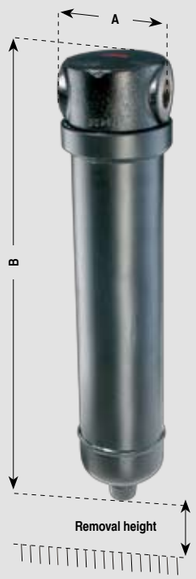

Designation:
High pressure filter

Filter series — "High Pressure"
FB 18 HP 62
Filter — Size — Max. pressure

Filters for 48 or 62 bar

Flow rate *) m³/min	Filter size	Air connection	Weight kg FB	FC	FE	FF	FG	Dimensions A, B mm FB	FC	FE	FF	FG	Removal height mm	Max. working pressure bar
1.75	**18**	R 1/2	9					371 x 146					300	62
2.83	**28**	R 1	9					371 x 117					300	62
7.1	**71**	R 1	12					591 x 117					520	48
14.2	**142**	DN 65	35					930 x 350					650	48

Correction factors

Working pressure bar	7	25	40	64
Conversion factor for flow rate	1	3	5	8

*) Air flow at 7 bar (g) referred to 1 bar (a) und 20 °C

Replacement filter elements

Filter series — "High Pressure"
E-E-18/28 HP 62
Replacement filter element — Size — Max. pressure

Replacement filter elements

Filter size	No.	Replacement filter elements for high-pressure filter series FB	FC	FD	FE	FF
18	1	E-B-18/28	E-B-18/28	E-B-18/28	E-B-18/28	E-B-18/28
28	1	E-B-18/28	E-B-18/28	E-B-18/28	E-B-18/28	E-B-18/28
71	1	E-B-71	E-C-71	E-E-71	E-F-71	E-G-71
142	1	E-B-283	E-C-283	E-E-283	E-F-283	E-G-283

Technical Specifications

Sterile filters

Designation:
Sterile filter
Size
F 6 P-ST
Filter "Sterile"

Flow rate *) m³/min	Filter size	Compressed air connection	Weight kg	Dimensions A, B, C mm	Removal height (for maintenance) (upwards) mm
1	**6**	R 1/4	1.7	215; 108; 55	90
1.5	**9**	R 3/8	1.9	245; 108; 55	120
2	**12**	R 1/2	1.9	245; 108; 55	120
3	**18**	R 3/4	2	270; 125; 55	150
4.5	**27**	R 1	2.6	300; 125; 75	150
6	**36**	R 1 1/4	3	350; 140; 75	200
8	**48**	R 1 1/4	4.3	380; 170; 94	200
12	**72**	R 2	4.8	455; 170; 94	280
18	**108**	R 2	5.3	580; 170; 94	450
24	**144**	R 2 1/2	9	765; 216; 106	580
32	**192**	R 3	10.8	1015; 216; 106	850
48	**288**	R 3	16.2	1035; 240; 119	850

Replace-ment filter

Replacement filter elements
"Sterile"
03/10 P-ST
Filter

Filter size	No.	Replacement filter element for sterile filter
6	**1**	**03/10 P-ST**
9	**1**	**04/10 P-ST**
12	**1**	**04/20 P-ST**
18	**1**	**05/20 P-ST**
27	**1**	**05/25 P-ST**
36	**1**	**07/25 P-ST**
48	**1**	**07/30 P-ST**
72	**1**	**10/30 P-ST**
108	**1**	**15/30 P-ST**
144	**1**	**20/30 P-ST**
192	**1**	**30/30 P-ST**
288	**1**	**30/50 P-ST**

Correction factors

Working pressure bar	*2*	*3*	*4*	*5*	*6*	*7*	*8*	*9*	*10*	*11*	*12*	*13*	*14*	*15*	*16*
Conversion factor for flow rate	0.36	0.5	0.6	0.75	0.9	1	1.1	1.2	1.4	1.5	1.6	1.75	1.9	2	2.1

Sterile filter

Centrifugal separator for max. 16 bar

Flow rate *) m³/min 7 bar	10 bar	Model	Compressed air connection	Volume l	Weight kg	Dimensions H x B x Ø mm
2.0	**2.3**	**ZK 01**	G 3/4	0.8	1.1	292 x 89 x –
4.1	**5.0**	**ZK 02**	G 1	1.8	2.2	391.5 x 109 x –
6	**7.3**	**ZK 03**	G 1 1/4	1.8	2.2	391.5 x 109 x –
9.3	**11.3**	**ZK 04**	G 1 1/2	1.8	2.2	391.5 x 109 x –
15.2	**18.0**	**ZK 05**	G 2	5.3	4.3	575 x 150 x –
16.3	**19.3**	**ZK 061**	DN 65	11.0	22.0	654 x 370 x 168.3
26.4	**31.3**	**ZK 071**	DN 65	17.5	28.0	733 x 400 x 193.7
26.4	**31.3**	**ZK 072**	DN 80	18.0	30.0	733 x 400 x 193.7
46.1	**55.4**	**ZK 08**	DN 125	35.5	50.0	865 x 450 x 244.5
30.6	**36.7**	**ZK 081**	DN 80	34.0	44.0	892 x 460 x 244.5
36.8	**43.6**	**ZK 091**	DN 80	47.0	52.0	983 x 550 x 273
47.7	**56.9**	**ZK 09**	DN 125	50.0	60.0	983 x 550 x 273
80	**95.8**	**ZK 10**	DN 150	76.0	74.5	1082 x 570 x 324

*) Air flow at 7 bar (g) referred to 1 bar (a) and 20 °C

Centrifugal separator
ZK 01 to ZK 05

Centrifugal separator

KAESER filters – Options and accessories

The filter monitor

Indicates when filter change is required.

- Indicates filter changes based on prescribed operational parameters
- Continuous measurement using intelligent electronics

- Easy-to-read LCD display, alarm LED
- Digital display of pressure drop

Condensate drain ECO DRAIN

- Non-wearing electronic sensor, no moving parts
- Maximum reliability, no sticking or clogging
- No compressed air losses
- Test button
- Self-monitoring electronics with automatic alarm sequences
- Volt-free alarm contact (not with ECO DRAIN 30)
- LEDs for power supply and alarm (not with ECO DRAIN 30)
- AC and DC versions (50 to 60 Hz) available
- All controls are ingress resistant as per IP 65 (IP 54 for ECO DRAIN 30 and 31)

Filter monitor box

The Filter Monitor Box allows remote filter monitoring. It evaluates the signals from a filter monitor, as well as from an ECO DRAIN condensate drain, and can pass messages to a central maintenance control system via two alarm contacts.

Group alarm (volt-free contact)

- Indication of (time-controlled) service interval for filter element change
- Indication of optimum time for filter element change computed via measurement value processing
- Maximum differential pressure exceeded (2 minute delay)
- Condensate drain alarm

Safety alarm (volt-free contact only active in safety mode)

- Maximum differential pressure exceeded (5 second delay)

The power supply for the filter monitor and ECO-DRAIN is provided by the Filter monitor box.

Wall bracket

Simple installation:

- Remove differential pressure indicator, remove fixing screws
- Screw the bracket to the wall
- Screw the filter housing to the bracket
- Re-install the differential pressure indicator

Modular design

The specially designed housing allows various filters to be combined together in series without the need for additional piping.

Certified Compressed Air Quality

The oil and solid particle content is reliably kept below ISO 8573-1 Class 1 limits. After passing through the air treatment systems, the delivered compressed air is designated as technically oil-free. The quality of the air produced by the KAESER compressed air system is tested and certified by TÜV, the German Technical Inspection Authority.

Note: Please also consider KAESER Air Main Charging Systems (See brochure P773), as these also help to ensure consistent compressed air quality.

KAESER COMPRESSORS

Genuine KAESER replacement filter elements

Only genuine KAESER replacement filter elements ensure reliable filtration with minimal pressure losses.

- Coalescence filter with new, matrix filter-fibre structure
- High efficiency even at low air volumes of only five percent of nominal flow
- Reliable element to housing seal
- Element supported by oil and acid resistant stainless steel orifice tubes and end caps

KAESER replacement filter elements are also available for other housings.

Timely filter changes significantly reduce energy costs

Operational parameters: 6000 operating hrs/yr – 0.20 €/kWh – 8 % energy saving

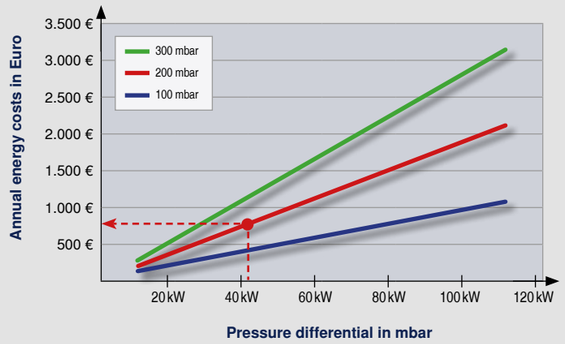

Reduce operating costs

A pressure loss of only approx. 0.35 bar is significantly more expensive than the costs required to change the filter element. Timely filter changes save considerable operating costs.

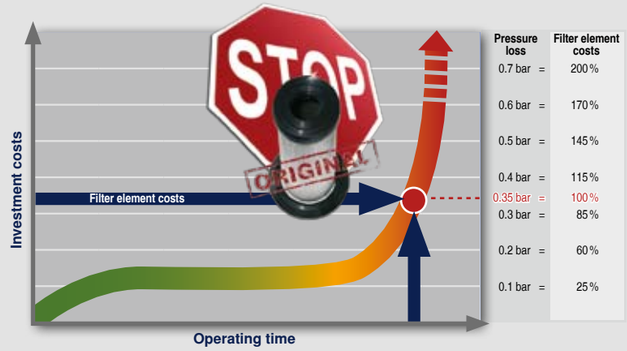

Comprehensive design know-how

KESS (KAESER's Energy Saving System) provides comprehensive analysis of your compressed air usage, enabling KAESER's experts to plan and design a system that is specially tailored to meet all of your compressed air needs. Typically ensuring a 95-98% load capacity, KAESER compressed air systems provide exceptional efficiency and produce application-specific quality compressed air at lowest possible cost. Use this expertise to your advantage and let KAESER design your compressed air system.

Choose the required grade of treatment according to your field of application:

Air treatment using a refrigeration dryer (pressure dew point + 3 °C)

Examples: Selection of treatment classes to ISO 8573-1 [1]

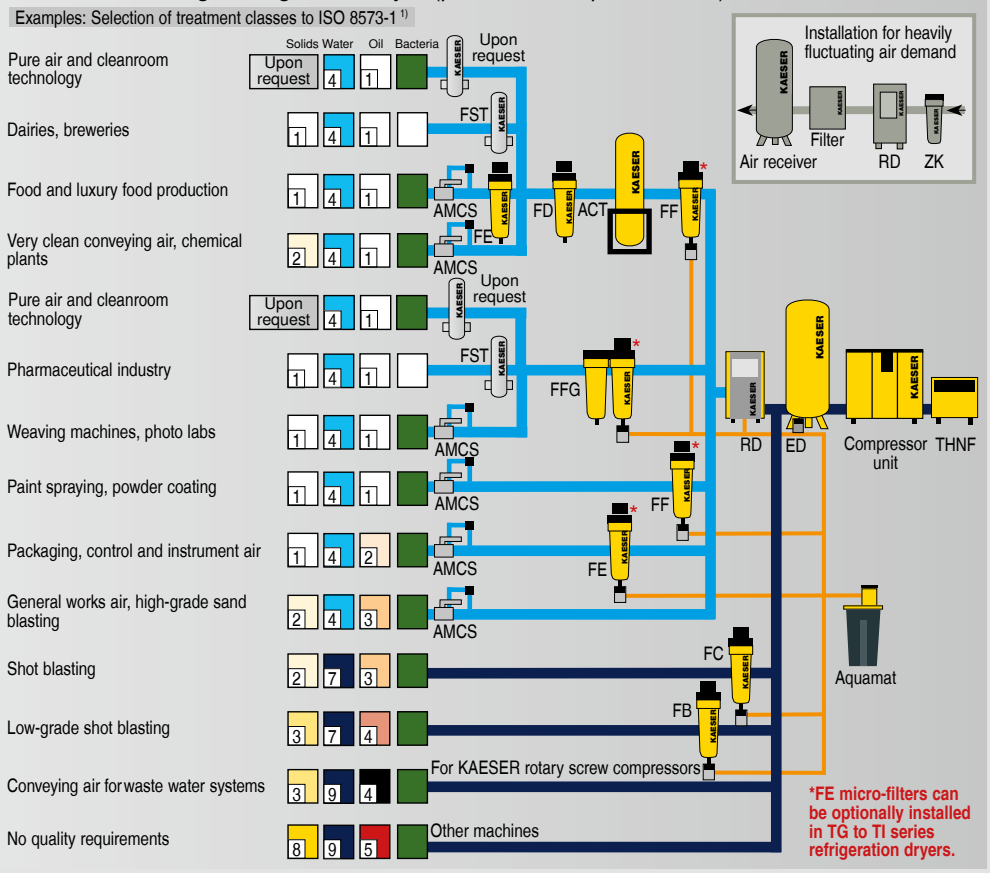

Explanation:

THNF = Bag filter
Cleans dusty and heavily contaminated intake air

ZK = Centrifugal separator
Separates accumulating condensate

ED = Eco-drain
Electronic level-controlled condensate drain

FB = Pre-filter

FC = Pre-filter

FD = Particulate filter (attrition)

FE = Micro-filter
Separates aerosol oil and solid particles

FF = Micro-filter
Separates aerosol oil and solid particles

FG = Activated carbon filter
For adsorption of oil vapours

FFG = Activated carbon and micro-filter combination

RD = Refrigeration dryer
For drying compressed air, pressure dew point to +3 °C

DD = Desiccant dryer
For drying compressed air, pressure dew point to -70 °C

ACT = Activated carbon adsorber
For adsorption of oil vapours

FST = Sterile filter
For sterile compressed air

Aquamat = Condensate treatment system

AMCS = Air main charging system

Contaminants:

+	Solids –
+	Water/Condensate –
+	Oil –
+	Bacteria –

For air mains subject to sub-zero temperatures: Compressed air treatment with a desiccant dryer (pressure dew point to -70 °C)

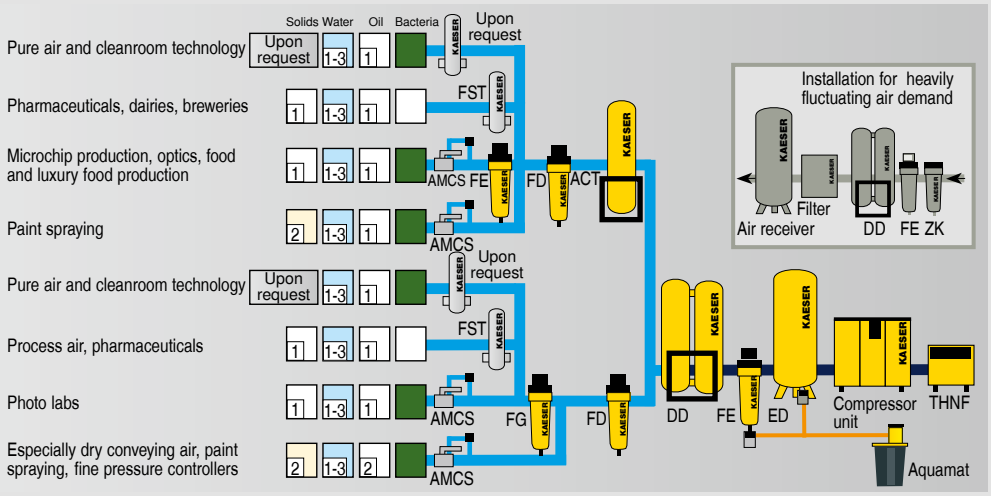

Degree of filtration:

Class ISO 8573-1	Solid particles [1]		Humidity [2]	Total oil content [2]
	Max. particle size µm	Max. particle concentration mg/m³	Pressure dew point (x = Liquid water in g/m³)	mg/m³
0	e.g. Consult KAESER regarding pure air and cleanroom technology			
1	0.1	0.1	≤ - 70	≤ 0.01
2	1	1	≤ - 40	≤ 0.1
3	5	5	≤ - 20	≤ 1
4	15	8	≤ + 3	≤ 5
5	40	10	≤ + 7	–
6	–	–	≤ + 10	–
7	–	–	x ≤ 0.5	–
8	–	–	0.5 < x ≤ 5	–
9	–	–	5 < x ≤ 10	–

[1] As per ISO 8573-1:1991 (The specification for particle content is not measured as per ISO 8573-1:2001, as the limits defined therein for Class 1 are to be applied to 'Cleanrooms').
[2] As per ISO 8573-1:2001

KAESER Compressors SA (PTY) Ltd.
79 Watt Street – 1401 Meadowdale-Johannesburg – P.O. Box 5031
Phone: 0027 11974 5002 – Fax: 0027 11974 6696
www.kaeser.co.za – Email: info.southafrica@kaeser.com

LGA InterCert
Certified QM/EM System
ISO 9001:2008 / ISO 14001:2004

KAESER Kompressoren GmbH
P.O. Box 2143 – 96410 Coburg – GERMANY – Tel: +49 9561 640-0 – Fax: +49 9561 640130
www.kaeser.com – e-mail: productinfo@kaeser.com

P-725ED.18/09 Specifications are subject to change without notice